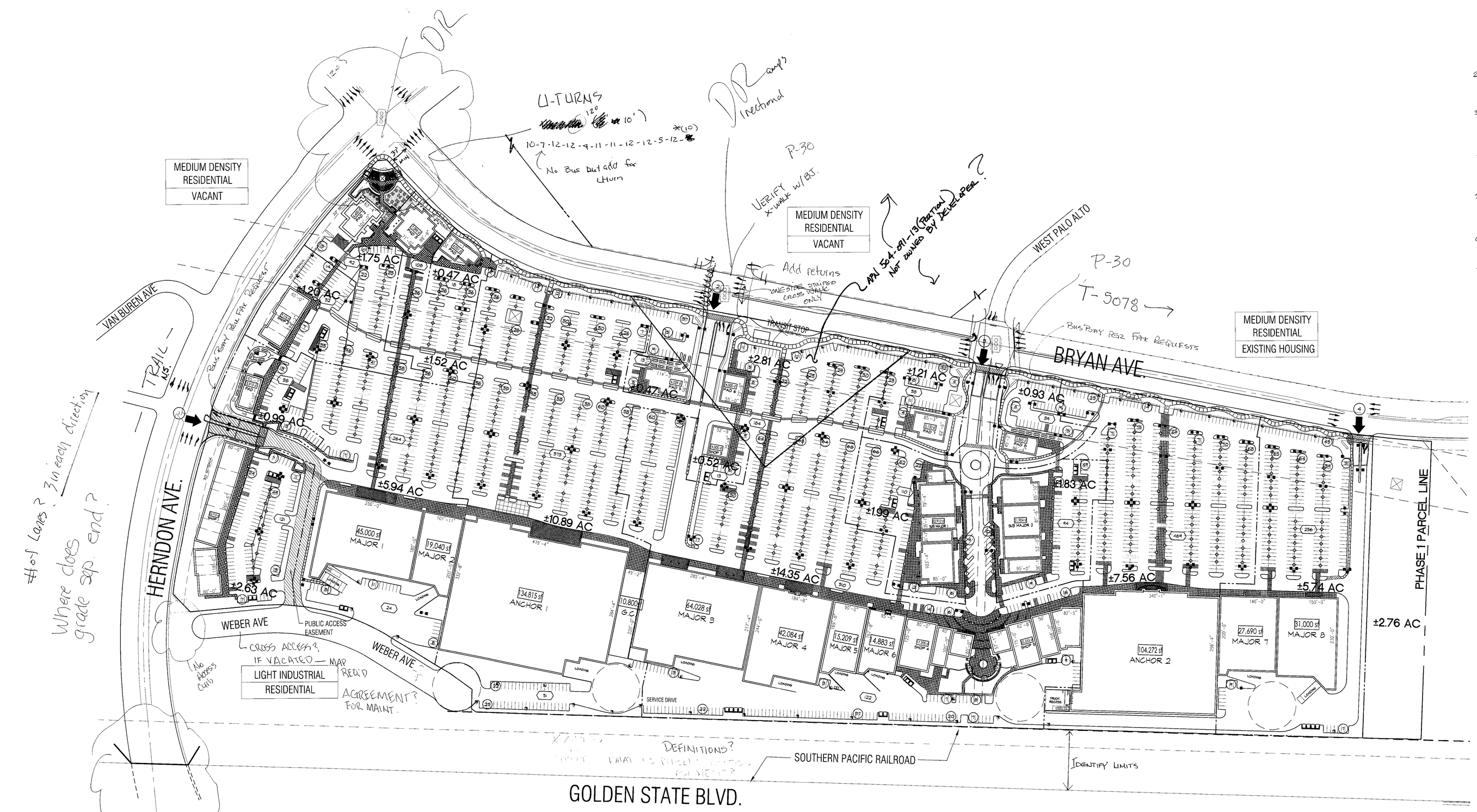

ADD NOTES:

1. ANY SURVEY MONUMENTS WITHIN THE AREA OF CONSTRUCTION SHALL BE PRESERVED OR RESET BY A PERSON LICENSED TO PRACTICE LAND SURVEYING IN THE STATE OF CALIFORNIA.
2. REPAIR ALL DAMAGED AND/OR OFF-GRADE CONCRETE STREET IMPROVEMENTS, AS DETERMINED BY THE CONSTRUCTION MANAGEMENT ENGINEER, PRIOR TO OCCUPANCY.
3. 2 WORKING DAYS BEFORE COMMENCING EXCAVATION OPERATIONS WITHIN THE STREET RIGHT-OF-WAY AND/OR UTILITY EASEMENTS, ALL EXISTING UNDERGROUND FACILITIES SHALL HAVE BEEN LOCATED BY UNDERGROUND SERVICES ALERT (USA). CALL 1-800-642-2444
4. UNDERGROUND ALL EXISTING OFF-SITE OVERHEAD UTILITIES WITHIN THE LIMITS OF THIS APPLICATION AS PER FMC SECTION 12-1011 AND RESOLUTION NO. 78-522/88229.
5. DEED(S) OF EASEMENT(S) FOR THE REQUIRED DEDICATION(S) SHALL BE PREPARED BY THE OWNER/DEVELOPER'S ENGINEER AND SUBMITTED TO THE CITY WITH VERIFICATION OF OWNERSHIP PRIOR TO ISSUANCE OF BUILDING PERMITS.
6. CONTACT PUBLIC WORKS DEPARTMENT, TRAFFIC ENGINEERING @ 621-8800. 10 WORKING DAYS PRIOR TO ANY OFF-SITE CONCRETE CONSTRUCTION.
7. SUBMIT ENGINEERED STREET CONSTRUCTION PLANS TO PUBLIC WORKS DEPARTMENT, ENGINEERING SERVICES
8. SUBMIT STREET LIGHTING PLANS TO PUBLIC WORKS DEPARTMENT, TRAFFIC ENGINEERING
9. ALL IMPROVEMENTS SHALL BE CONSTRUCTED IN ACCORDANCE WITH THE STANDARD SPECIFICATIONS OF THE CITY OF FRESNO PUBLIC WORKS DEPARTMENT OR STREET CONSTRUCTION PLANS AS REQUIRED AND APPROVED BY THE CITY ENGINEER. THE PERFORMANCE OF ANY WORK WITHIN THE PUBLIC STREET RIGHT-OF-WAY (INCLUDING PEDESTRIAN AND UTILITY EASEMENTS) REQUIRES A STREET WORK PERMIT PRIOR TO COMMENCEMENT OF WORK. ALL REQUIRED STREET IMPROVEMENTS MUST BE COMPLETED AND ACCEPTED BY THE CITY PRIOR TO OCCUPANCY.
10. ANY UTILITIES REQUIRING RELOCATION SHALL BE THE RESPONSIBILITY AND AT THE EXPENSE OF THE DEVELOPER; FIRE HYDRANTS WILL BE RELOCATED BY CITY FORCES. DEVELOPER IS RESPONSIBLE TO NOTIFY CITY WATER DIVISION @ 621-5300 TO ARRANGE AND COORDINATE WORK.
11. THE REQUIRED 4' MINIMUM PATH OF TRAVEL SHALL BE PROVIDED ALONG THE PUBLIC SIDEWALK DIRECTLY IN FRONT OF PROPERTY, AS REQUIRED BY THE CALIFORNIA ADMINISTRATION CODE (TITLE 24). A PEDESTRIAN EASEMENT MAY BE REQUIRED IF REQUIREMENTS ARE NOT MET.

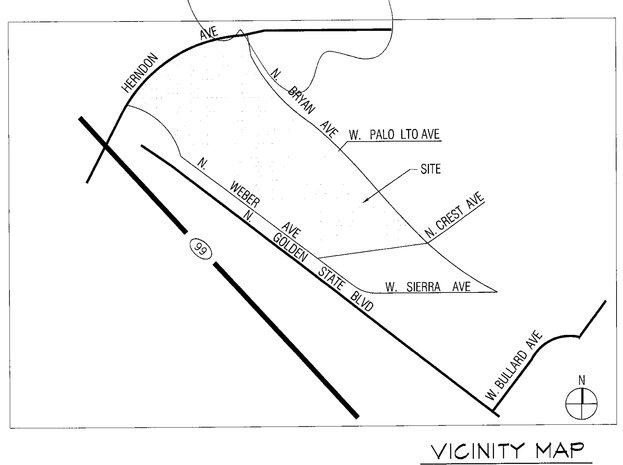

VICINITY MAP
NOT TO SCALE

✓ Vacate weber or Alternative to be approved City + Traffic engr.

PROVIDE:

3. LEGAL DESCRIPTION

Herndon
No Bike in street
Trail opp. side

* monolithic across tracks 10' pattern 6' walk 4' from Curb face

SITE PLAN LEGEND

- (M) TYPE V-N, FULLY SPRINK. M OCCUPANCY
- (A) TYPE V-N, FULLY SPRINK. A-3 OCCUPANCY
- (M/A) TYPE V-N, FULLY SPRINK. M/A-3 OCCUPANCY
- (#) NUMBER OF PARKING STALLS PER ROW
- TRANSMISSION TOWER
- MAIN ENTRY DRIVES
- LIGHT POLE
- CURRENT ZOING / CURRENT USE
- 6'x6' TREE WELL
- CART CORRALS
- PATH OF TRAVEL
- PUBLIC ACCESS EASEMENT

SITE PLAN KEY NOTES

- S1 TRAFFIC SIGNAL
- S2 MONUMENT SIGN, TYPICAL
- S3 SIDEWALK PER STREET SECTION
- S4 FUTURE PAD
- S5 PARK & RIDE
- S6 TYPICAL TRASH ENCLOSURE
- S7 PEDESTRIAN PATH
- S8 6' SCREEN WALL, TYP.
- S9 TRUCK TURNING PATH
- S10 ACCENT PAVING
- S11 6' HIGH PIPE FENCE
- S12 20' SEWER EASEMENT
- S13 NOT USED
- S14 FOUNTAIN
- S15 LOADING ZONE
- S16 TRANSIT STOP BUS ENCLOSURE 5'x12'
- S17 DRIVE THRU WINDOW

200' 100' 50' 0'

AUGUST 22, 2008

0813.1084.01

PHASE 1 SITE PLAN

COPYRIGHT © 2007

FRESNO SHORES, LLC

MARKETPLACE AT EL PASEO

HERNDON AVENUE AND BRYAN AVENUE
FRESNO, CALIFORNIA

Market at El Paseo

525 E. COLORADO BOULEVARD
4TH FLOOR
PASADENA, CA 91101

T 626.796.8230
F 626.796.8735

KK architects™

A1.11

NOTE: THIS INFORMATION IS CONCEPTUAL IN NATURE AND IS SUBJECT TO ADJUSTMENTS PENDING FURTHER VERIFICATION AND CLIENT, TENANT, AND GOVERNMENTAL AGENCY APPROVALS. NO WARRANTIES OR GUARANTEES OF ANY KIND ARE GIVEN OR IMPLIED BY THE ARCHITECT.

MEDIUM DENSITY RESIDENTIAL

VACANT

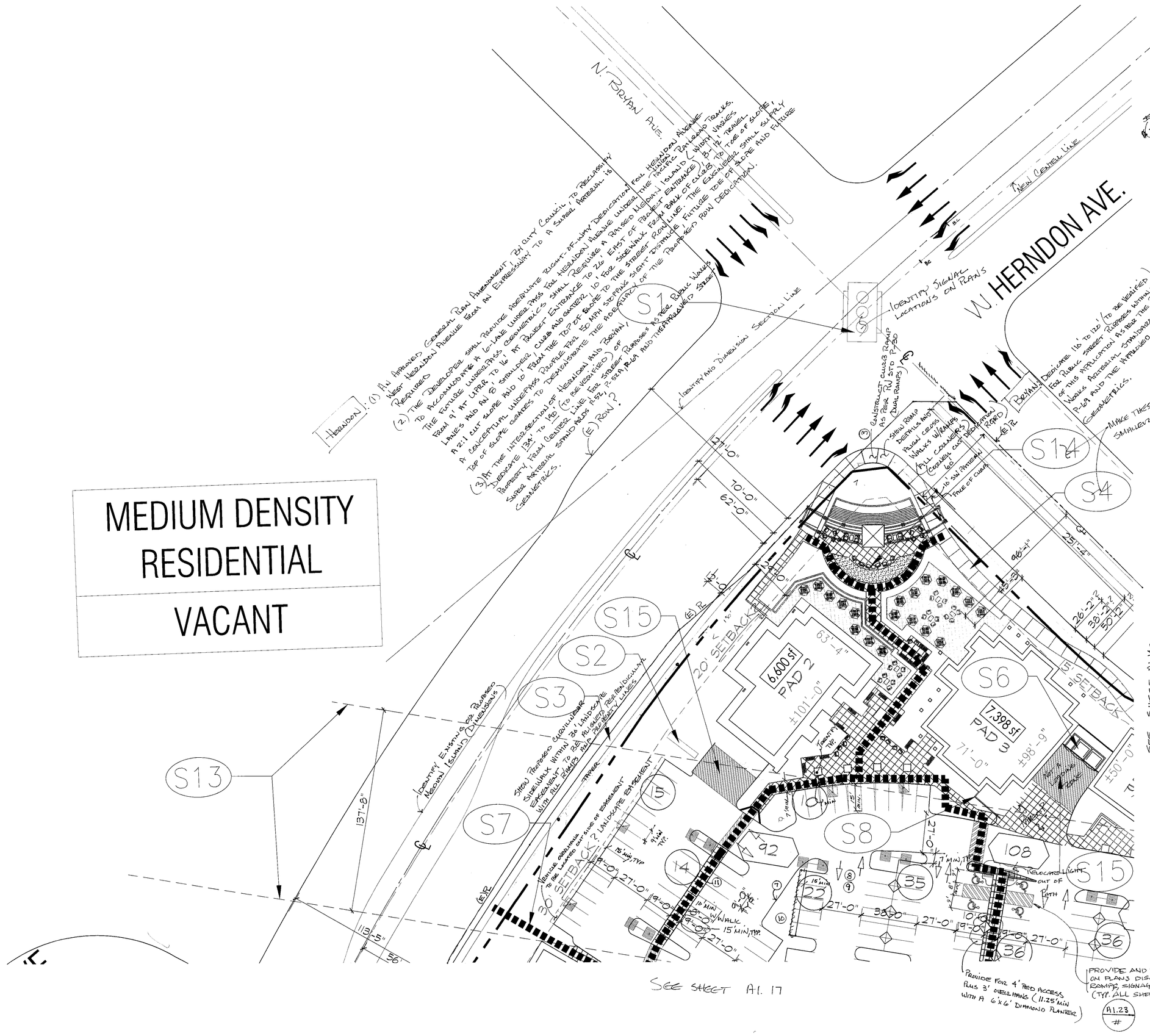

SITE PLAN KEY NOTES

- S1 TRAFFIC SIGNAL SHOW LOCATION ON PLAN
- S2 MONUMENT SIGN, TYPICAL
- S3 ~~SIDEWALK PER STREET SECTION ADJACENT TO HERNDON.~~ SEE NOTE #2a-d
- S4 6' 10' MEANDERING SIDEWALK ADJACENT TO BRYAN
- S5 PARK & RIDE
- S6 TYPICAL TRASH ENCLOSURE AS PER CITY STANDARDS.
- S7 PEDESTRIAN PATH
- S8 6' SCREEN WALL, TYP.
- S9 TRUCK TURNING PATH
- S10 ACCENT PAVING
- S11 6' HIGH PIPE FENCE
- S12 20' SEWER EASEMENT
- S13 PG&E EASEMENT
- S14 OUTDOOR PATIO
- S15 LOADING ZONE (12' x 40' MIN) PASSENGER? OR PICK-UP/DROP-OFF — ACCESSIBLE TRUCK LOADING SPACE ONLY!
- S16 TRANSIT STOP BUS ENCLOSURE 5'x12'
- S17 DRIVE THRU WINDOW

PROVIDE AN OPERATIONAL STATEMENT FOR LOADING ZONES SHOWN NEAR PARKING STALLS. COORDINATE WITH PLANNING DEPT. AND TRAFFIC PLANNING FOR APPROVAL OF LOCATIONS

SITE PLAN LEGEND

- M TYPE V-N, FULLY SPRINK. M OCCUPANCY
- A TYPE V-N, FULLY SPRINK. A-3 OCCUPANCY
- M/A TYPE V-N, FULLY SPRINK. M/A-3 OCCUPANCY
- TRANSMISSION TOWER
- # MAIN ENTRY DRIVES AND DRIVEWAY NUMBER
- LIGHT POLE (POLE #TS35) TYP. 38' HEIGHT. IN PG&E EASEMENT 15' HEIGHT.
- LIGHT POLE (HAPCO POLE) TYP. 38' HEIGHT. IN PG&E EASEMENT 15' HEIGHT.
- CURRENT ZONING / CURRENT USE
- 6'x6' TREE WELL
- CART CORRALS
- PEDESTRIAN PATH OF TRAVEL
- PROPOSED PROPERTY LINE — EXISTING PROPERTY LINE
- PUBLIC ACCESS EASEMENT
- # NUMBER OF PARKING STALLS PER ROW
- # NUMBER OF PARKING STALLS PER PARCEL
- FIRE HYDRANT
- G.C. GARDEN CENTER

* IDENTIFY PROPOSED UTILITIES: STREET LIGHTS, SIGNAL POLE AND BOXES, FIRE HYDRANTS ETC.
* IDENTIFY BUS BAY FURNITURE
* IDENTIFY ALL EASEMENTS AND DEDICATIONS, AND VACATIONS.
* IDENTIFY AND DIMENSION EXISTING PROPERTY LINES — ON OVER ALL SITE SHEET —

ADD CONSTRUCTION NOTES: (ALL SHEETS, TYPICAL) IDENTIFY ALL PROPOSED ITEMS TO BE CONSTRUCTED

1. DESIGN AND CONSTRUCT CURB, GUTTER, 36 FT AC PAVING, AND 10 FT COMMERCIAL/~~RESIDENTIAL~~ SIDEWALK PATTERN TO PUBLIC WORKS STD. P-5.

2a. CONSTRUCT A 6' CURVILINEAR SIDEWALK AS PER FW STD. P-5 AND P-7 WITHIN THE LANDSCAPE EASEMENT ALONG SITE FRONTAGE.

(b) TRANSITION 6' CURVILINEAR SIDEWALK INTO 10' SIDEWALK PATTERN ALONG STREET, ALIGN PARALLEL 4' FROM FACE OF CURB, FROM EDGE OF PROPERTY TO THE SOUTHEAST CORNER OF GOLDEN STATE AND HERNDON.

(c) ALIGN THE 6' SIDEWALK PERPENDICULAR TO RAILROAD TRACKS AND ADJACENT TO BACK-OF-CURB.

(d) SIDEWALK SHALL LINE UP PERPENDICULAR AT ALL RAMPS AND PROPERTY LINES.

— BRYAN —

(a.) CONST. A 6' CURVILINEAR AS PER FW STD. P-5 AND P-7. SIDEWALK SHALL LINE UP PERPENDICULAR AT ALL RAMPS AND PROPERTY LINES. A DEDICATION FOR A PEDESTRIAN EASEMENT IS REQD.

3. CONSTRUCT HANDICAP RAMP PER PUBLIC WORKS STD. P-30, RADIUS = 30' (MAYVARY) DETECTABLE WARNING DEVICES ARE REQUIRED. REF: FW STD P-86 AND P-87.

4. REMOVE EXISTING IMPROVEMENTS AND INSTALL REQUIRED IMPROVEMENTS TO NEW STREET ALIGNMENT AND GRADE.

5. CONSTRUCT AN UNDERGROUND STREET LIGHTING SYSTEM AS PER PUBLIC WORKS STANDARD E-1 AND E-7. STREET LIGHTING PLANS ARE REQUIRED AND MUST BE APPROVED BY THE PUBLIC WORKS DEPARTMENT/ TRAFFIC ENGINEERING PRIOR TO ENCROACHMENT OF WORK.

6. DESIGN AND CONSTRUCT STREET-TYPE APPROACH TO PUBLIC WORKS STD P-77 AND AS APPROVED BY TRAFFIC ENGINEER. PROVIDE 16' RED CURBING (3 COATS) ON BOTH SIDES OF THE PROPOSED DRIVE APPROACHES.

7. CONSTRUCT 6" CONCRETE CURB.

8. PROPOSED PAINTED DIRECTIONAL ARROWS (AT THE BEGINNING AND ENDS OF AISLES, TYP.)

9. DESIGN AND CONSTRUCT PARKING LOT PAVEMENT TO PUBLIC WORKS STANDARDS P-41, P-42 AND P-43.

10. PROPOSED PLANTER AREA

11. PROPOSED WALKWAYS

12. CONSTRUCT HANDICAP RAMP PER PUBLIC WORKS STD. P-34, 20' MIN. RADIUS - 30' MAX.

13. CONSTRUCT BUS BAY CURB AND GUTTER AS PER FW STD P-13, COMPLETE WITH A 10' MONOLITHIC SIDEWALK. CONSTRUCT CONCRETE PAD TO ACCOMODATE ANY ADDITIONAL AREA NEED FOR BUS FURNITURE AND TO COMPLY WITH ADA ACCESS REQUIREMENTS. PED EASEMENT REQUIRED FOR PUBLIC ACCESS, IF LIMITS EXTEND BEYOND 10' PATTERN. ETC.

* COORDINATE WITH PUBLIC WORKS AND FAX FOR APPROVED LOCATIONS.

14. INSTALL 30" STATE STANDARD "STOP" SIGN(S) AT LOCATION(S) SHOWN. SIGN SHALL BE MOUNTED ON A 2" GALVANIZED POST WITH THE BOTTOM OF THE SIGN 7' ABOVE GROUND. LOCATED BEHIND CURB AND IMMEDIATELY BEHIND MAJOR STREET SIDEWALK. A "RIGHT TURN ONLY" SIGN IS ALSO REQUIRED AT SAME LOCATION. INSTALL 30" X 30" STATE STANDARD SIGN IMMEDIATELY BELOW THE STOP SIGN ON SAME POST.

60' 30' 15' 0'

AUGUST 22, 2008 — 0813.1084.01

COPYRIGHT © 2007

QUADRANT 1

MARKETPLACE AT EL PASEO

HERNDON AVENUE AND BRYAN AVENUE
FRESNO, CALIFORNIA

FRESNO SHORES, LLC

Market at El Paseo
525 E. COLORADO BOULEVARD
4TH FLOOR
PASADENA, CA 91101
T 626.796.8230
F 626.796.8735

KK architects™

A1.13

NOTE: THIS INFORMATION IS CONCEPTUAL IN NATURE AND IS SUBJECT TO ADJUSTMENTS PENDING FURTHER VERIFICATION AND CLIENT, TENANT, AND GOVERNMENTAL AGENCY APPROVALS. NO WARRANTIES OR GUARANTIES

SITE PLAN KEY NOTES

- S1 TRAFFIC SIGNAL
- S2 MONUMENT SIGN, TYPICAL
- S3 SIDEWALK PER STREET SECTION ADJACENT TO HERNDON
- S4 10' MEANDERING SIDEWALK ADJACENT TO BRYAN
- S5 PARK & RIDE
- S6 TYPICAL TRASH ENCLOSURE
- S7 PEDESTRIAN PATH
- S8 6' SCREEN WALL, TYP.
- S9 TRUCK TURNING PATH
- S10 ACCENT PAVING
- S11 6' HIGH PIPE FENCE
- S12 20' SEWER EASEMENT
- S13 PG&E EASEMENT
- S14 OUTDOOR PATIO
- S15 LOADING ZONE
- S16 TRANSIT STOP BUS ENCLOSURE 5'x12'
- S17 DRIVE THRU WINDOW

SITE PLAN LEGEND

- M — TYPE V-N, FULLY SPRINK. M OCCUPANCY
- A — TYPE V-N, FULLY SPRINK. A-3 OCCUPANCY
- M/A — TYPE V-N, FULLY SPRINK. M/A-3 OCCUPANCY
- TRANSMISSION TOWER
- # — MAIN ENTRY DRIVES AND DRIVEWAY NUMBER
- LIGHT POLE (POLE #RTS35) TYP. 38' HEIGHT. IN PG&E EASEMENT 15' HEIGHT.
- LIGHT POLE (HAPCO POLE) TYP. 38' HEIGHT. IN PG&E EASEMENT 15' HEIGHT.
- CURRENT ZONING / CURRENT USE
- 6'x6' TREE WELL
- CART CORRALS
- PEDESTRIAN PATH OF TRAVEL
- PROPERTY LINE
- PUBLIC ACCESS EASEMENT
- # — NUMBER OF PARKING STALLS PER ROW
- # — NUMBER OF PARKING STALLS PER PARCEL
- FIRE HYDRANT
- G.C. — GARDEN CENTER

60' 30' 15' 0'

AUGUST 22, 2008 0813.1084.01

COPYRIGHT © 2007

QUADRANT 2

FRESNO SHORES, LLC

MARKETPLACE AT EL PASEO

HERNDON AVENUE AND BRYAN AVENUE
FRESNO, CALIFORNIA

Market Place

525 E. COLORADO BOULEVARD
4TH FLOOR
PASADENA, CA 91101

T 626.796.8230
F 626.796.8735

KK architects™

A1.14

NOTE: THIS INFORMATION IS CONCEPTUAL IN NATURE AND IS SUBJECT TO ADJUSTMENTS PENDING FURTHER VERIFICATION AND CLIENT, TENANT, AND GOVERNMENTAL AGENCY APPROVALS. NO WARRANTIES OR GUARANTIES OF ANY KIND ARE GIVEN OR IMPLIED BY THE ARCHITECT.

A-2

SITE PLAN KEY NOTES

S1	TRAFFIC SIGNAL	S10	ACCENT PAVING
S2	MONUMENT SIGN, TYPICAL	S11	6' HIGH PIPE FENCE
S3	SIDEWALK PER STREET SECTION ADJACENT TO HERNDON	S12	20' SEWER EASEMENT
S4	6' 10' MEANDERING SIDEWALK ADJACENT TO BRYAN	S13	PG&E EASEMENT
S5	PARK & RIDE	S14	OUTDOOR PATIO
S6	TYPICAL TRASH ENCLOSURE	S15	LOADING ZONE
S7	PEDESTRIAN PATH	S16	TRANSIT STOP BUS ENCLOSURE 5'x12'
S8	6' SCREEN WALL, TYP.	S17	DRIVE THRU WINDOW
S9	TRUCK TURNING PATH		

SITE PLAN LEGEND

- M — TYPE V-N, FULLY SPRINK. M OCCUPANCY
- A — TYPE V-N, FULLY SPRINK. A-3 OCCUPANCY
- M/A — TYPE V-N, FULLY SPRINK. M/A-3 OCCUPANCY
- TRANSMISSION TOWER
- # — MAIN ENTRY DRIVES AND DRIVEWAY NUMBER
- LIGHT POLE (POLE #RTS35) TYP. 38' HEIGHT. IN PG&E EASEMENT 15' HEIGHT.
- LIGHT POLE (HAPCO POLE) TYP. 38' HEIGHT. IN PG&E EASEMENT 15' HEIGHT.
- CURRENT ZONING / CURRENT USE
- 6'x6' TREE WELL
- CART CORRALS
- PEDESTRIAN PATH OF TRAVEL
- PROPERTY LINE
- PUBLIC ACCESS EASEMENT
- # — NUMBER OF PARKING STALLS PER ROW
- # — NUMBER OF PARKING STALLS PER PARCEL
- FIRE HYDRANT
- G.C. — GARDEN CENTER

69' 30' 15' 0'

AUGUST 22, 2008

0813.1084.01

QUADRANT 6

COPYRIGHT© 2007

FRESNO SHORES, LLC

MARKETPLACE AT EL PASEO

HERNDON AVENUE AND BRYAN AVENUE
FRESNO, CALIFORNIA

Market at El Paseo

525 E. COLORADO BOULEVARD
4TH FLOOR
PASADENA, CA 91101

T 626.796.8230
F 626.796.8735

A1.18

KK architects™

NOTE: THIS INFORMATION IS CONCEPTUAL IN NATURE AND IS SUBJECT TO ADJUSTMENTS PENDING FURTHER VERIFICATION AND CLIENT, TENANT, AND GOVERNMENTAL AGENCY APPROVALS. NO WARRANTIES OR GUARANTIES OF ANY KIND ARE GIVEN OR IMPLIED BY THE ARCHITECT.

A-3

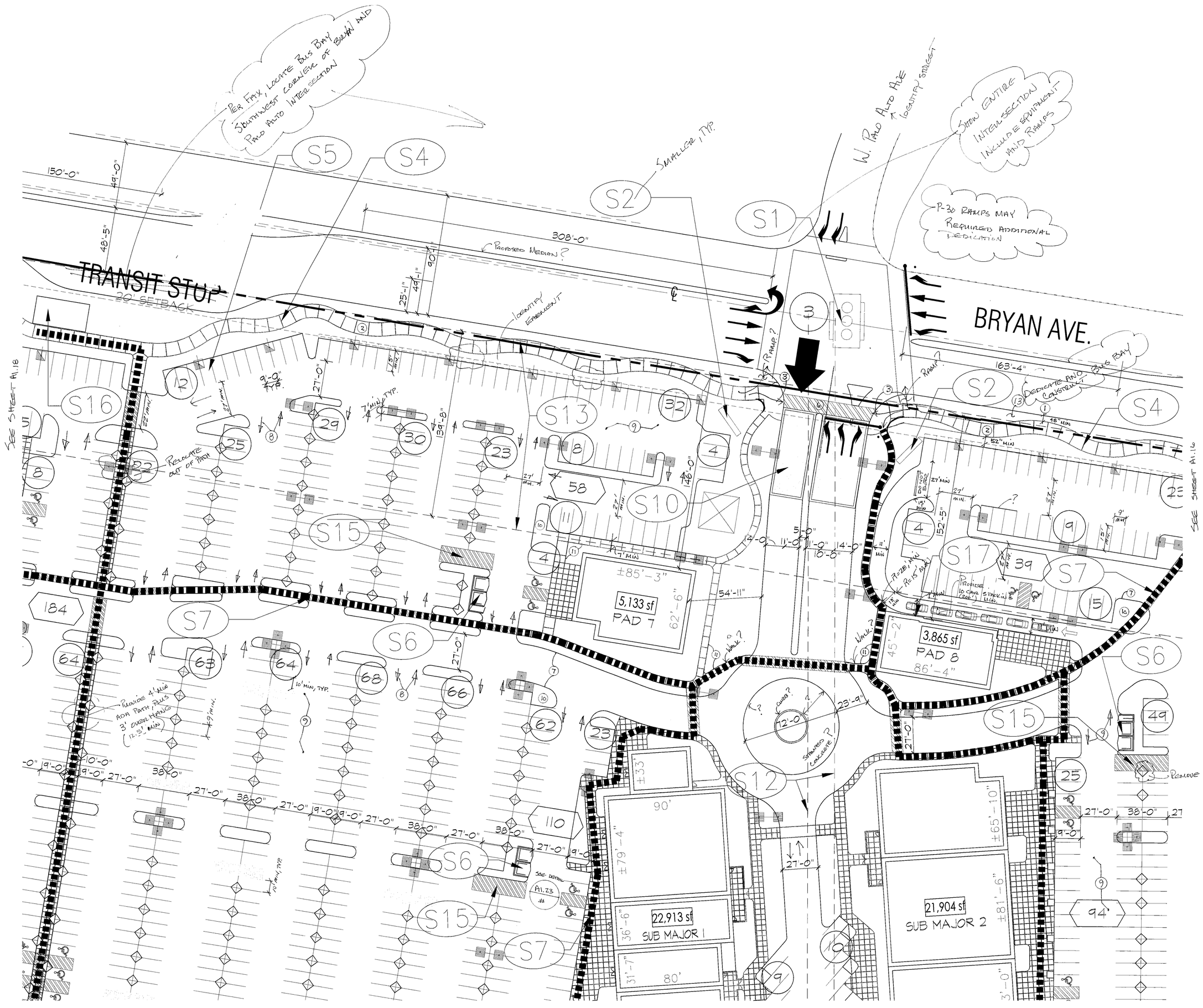

SITE PLAN KEY NOTES

S1	TRAFFIC SIGNAL	S10	ACCENT PAVING
S2	MONUMENT SIGN, TYPICAL	S11	6' HIGH PIPE FENCE
S3	SIDEWALK PER STREET SECTION ADJACENT TO HERNDON	S12	20' SEWER EASEMENT
S4	10' MEANDERING SIDEWALK ADJACENT TO BRYAN	S13	PG&E EASEMENT
S5	PARK & RIDE	S14	OUTDOOR PATIO
S6	TYPICAL TRASH ENCLOSURE	S15	LOADING ZONE
S7	PEDESTRIAN PATH	S16	TRANSIT STOP BUS ENCLOSURE 5'x12'
S8	6' SCREEN WALL, TYP.	S17	DRIVE THRU WINDOW
S9	TRUCK TURNING PATH		

SITE PLAN LEGEND

- (M) TYPE V-N, FULLY SPRINK. M OCCUPANCY
- (A) TYPE V-N, FULLY SPRINK. A-3 OCCUPANCY
- (M/A) TYPE V-N, FULLY SPRINK. M/A-3 OCCUPANCY
- TRANSMISSION TOWER
- (#) MAIN ENTRY DRIVES AND DRIVEWAY NUMBER
- LIGHT POLE (POLE #RTS35) TYP. 38' HEIGHT. IN PG&E EASEMENT 15' HEIGHT.
- LIGHT POLE (HAPCO POLE) TYP. 38' HEIGHT. IN PG&E EASEMENT 15' HEIGHT.
- CURRENT ZONING / CURRENT USE
- 6'x6' TREE WELL
- CART CORRALS
- PEDESTRIAN PATH OF TRAVEL
- PROPERTY LINE
- PUBLIC ACCESS EASEMENT
- (#) NUMBER OF PARKING STALLS PER ROW
- (#) NUMBER OF PARKING STALLS PER PARCEL
- FIRE HYDRANT
- G.C. GARDEN CENTER

60' 30' 15' 0'

AUGUST 22, 2008

0813.1084.01

COPYRIGHT © 2007

QUADRANT 3

FRESNO SHORES, LLC

MARKETPLACE AT EL PASEO

HERNDON AVENUE AND BRYAN AVENUE
FRESNO, CALIFORNIA

Market at El Paseo

525 E. COLORADO BOULEVARD
4TH FLOOR
PASADENA, CA 91101

T 626.796.8230
F 626.796.8735

KK architects™

A1.15

NOTE: THIS INFORMATION IS CONCEPTUAL IN NATURE AND IS SUBJECT TO ADJUSTMENTS PENDING FURTHER VERIFICATION AND CLIENT, TENANT, AND GOVERNMENTAL AGENCY APPROVALS. NO WARRANTIES OR GUARANTIES OF ANY KIND ARE GIVEN OR IMPLIED BY THE ARCHITECT.

R-4

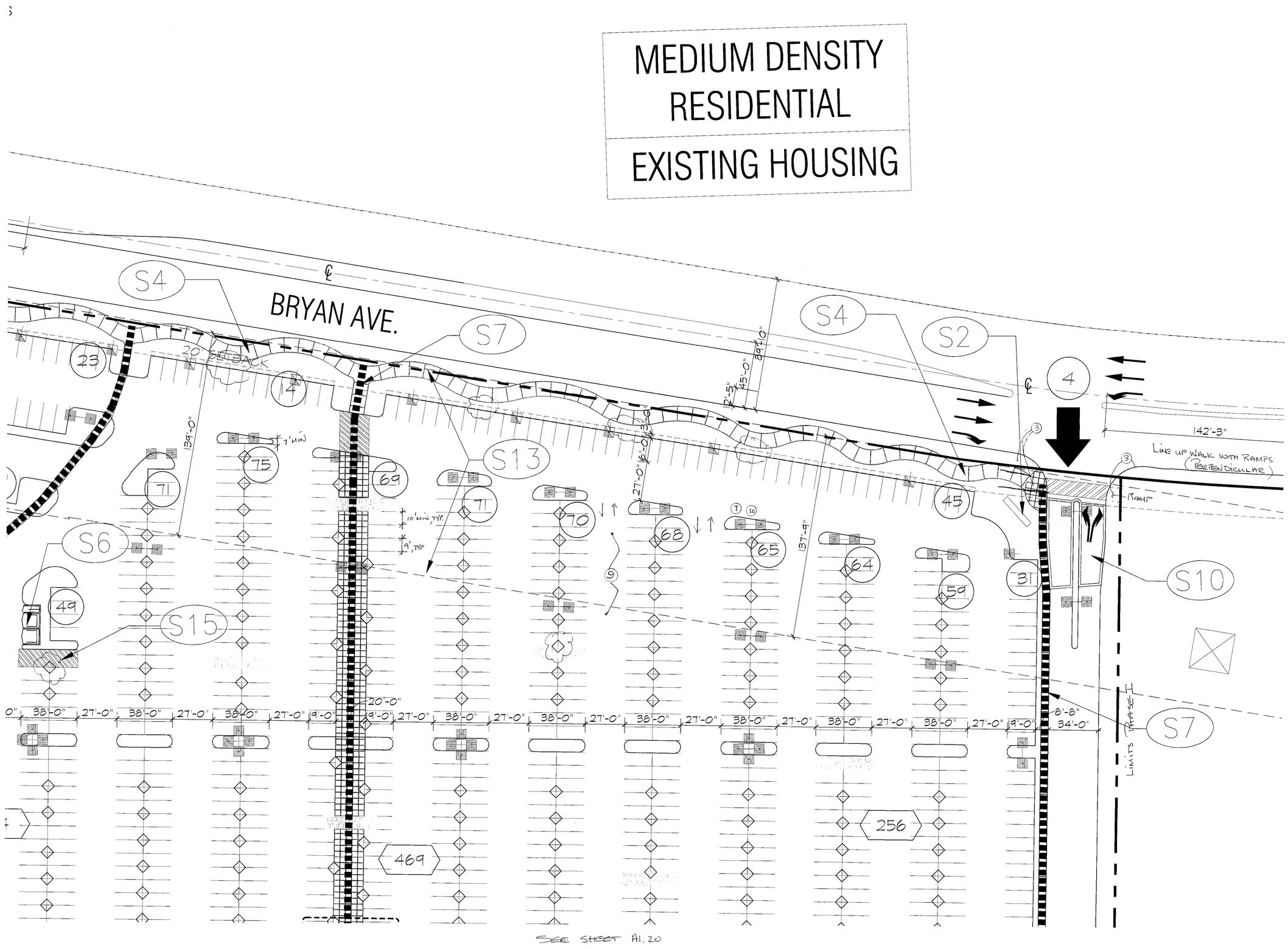

SITE PLAN KEY NOTES

- S1 TRAFFIC SIGNAL
- S2 MONUMENT SIGN, TYPICAL
- S3 SIDEWALK PER STREET SECTION ADJACENT TO HERNDON
- S4 10' MEANDERING SIDEWALK ADJACENT TO BRYAN
- S5 PARK & RIDE
- S6 TYPICAL TRASH ENCLOSURE
- S7 PEDESTRIAN PATH
- S8 6' SCREEN WALL, TYP.
- S9 TRUCK TURNING PATH
- S10 ACCENT PAVING
- S11 6' HIGH PIPE FENCE
- S12 20' SEWER EASEMENT
- S13 PG&E EASEMENT
- S14 OUTDOOR PATIO
- S15 LOADING ZONE
- S16 TRANSIT STOP BUS ENCLOSURE 5'x12'
- S17 DRIVE THRU WINDOW

SITE PLAN LEGEND

- M — TYPE V-N, FULLY SPRINK. M OCCUPANCY
- A — TYPE V-N, FULLY SPRINK. A-3 OCCUPANCY
- M/A — TYPE V-N, FULLY SPRINK. M/A-3 OCCUPANCY
- TRANSMISSION TOWER
- # — MAIN ENTRY DRIVES AND DRIVEWAY NUMBER
- LIGHT POLE (POLE #RTS35) TYP. 38' HEIGHT. IN PG&E EASEMENT 15' HEIGHT.
- LIGHT POLE (HAPCO POLE) TYP. 38' HEIGHT. IN PG&E EASEMENT 15' HEIGHT.
- CURRENT ZONING / CURRENT USE
- 6'x6' TREE WELL
- CART CORRALS
- PEDESTRIAN PATH OF TRAVEL
- PROPERTY LINE
- PUBLIC ACCESS EASEMENT
- # — NUMBER OF PARKING STALLS PER ROW
- # — NUMBER OF PARKING STALLS PER PARCEL
- FIRE HYDRANT
- G.C. — GARDEN CENTER

60' 30' 15' 0'

AUGUST 22, 2008

0813.1084.01

COPYRIGHT © 2007

QUADRANT 4

FRESNO SHORES, LLC

MARKETPLACE AT EL PASEO

HERNDON AVENUE AND BRYAN AVENUE
FRESNO, CALIFORNIA

Market Place

525 E. COLORADO BOULEVARD
4TH FLOOR
PASADENA, CA 91101

T 626.796.8230
F 626.796.8735

KK architects™

A1.16

NOTE: THIS INFORMATION IS CONCEPTUAL IN NATURE AND IS SUBJECT TO ADJUSTMENTS PENDING FURTHER VERIFICATION AND CLIENT, TENANT, AND GOVERNMENTAL AGENCY APPROVALS. NO WARRANTIES OR GUARANTIES OF ANY KIND ARE GIVEN OR IMPLIED BY THE ARCHITECT.

A-5

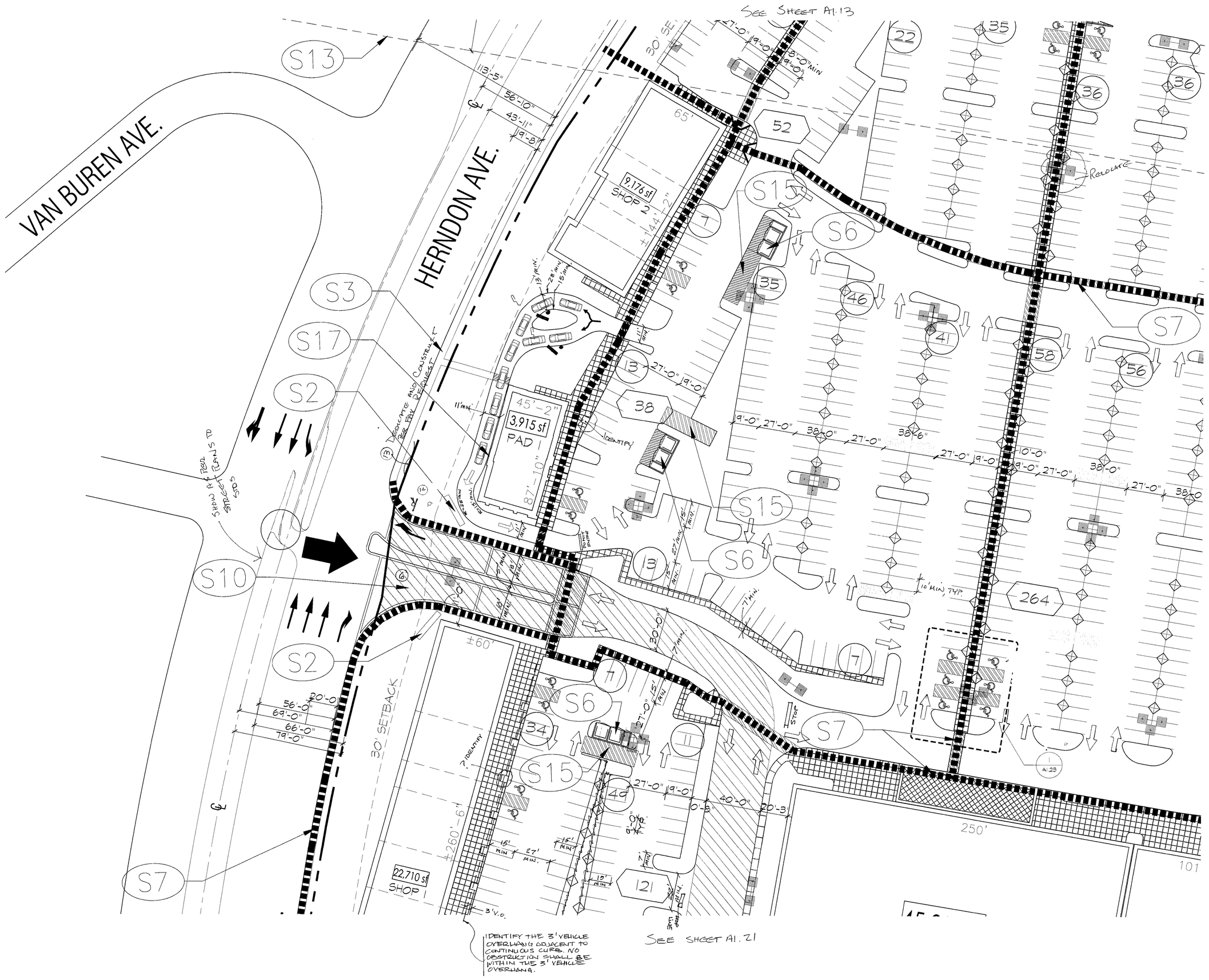

SITE PLAN KEY NOTES

S1	TRAFFIC SIGNAL	S10	ACCENT PAVING
S2	MONUMENT SIGN, TYPICAL	S11	6' HIGH PIPE FENCE
S3	SIDEWALK PER STREET SECTION ADJACENT TO HERNDON	S12	20' SEWER EASEMENT
S4	10' MEANDERING SIDEWALK ADJACENT TO BRYAN	S13	PG&E EASEMENT
S5	PARK & RIDE	S14	OUTDOOR PATIO
S6	TYPICAL TRASH ENCLOSURE	S15	LOADING ZONE 12X40
S7	PEDESTRIAN PATH	S16	TRANSIT STOP BUS ENCLOSURE 5'x12'
S8	6' SCREEN WALL, TYP.	S17	DRIVE THRU WINDOW
S9	TRUCK TURNING PATH	14	**INSTALL 30" STATE STANDARD "STOP" SIGN(S) AT LOCATION(S) SHOWN. SIGN SHALL BE MOUNTED ON A 2" GALVANIZED POST WITH THE BOTTOM OF THE SIGN 7' ABOVE GROUND; LOCATED BEHIND CURB AND IMMEDIATELY BEHIND MAJOR STREET SIDEWALK. A "RIGHT TURN ONLY" SIGN IS ALSO REQUIRED AT SAME LOCATION. INSTALL 36" X 36" STATE STANDARD SIGN IMMEDIATELY BELOW THE STOP SIGN ON SAME POST.**

SITE PLAN LEGEND

- M — TYPE V-N, FULLY SPRINK. M OCCUPANCY
- A — TYPE V-N, FULLY SPRINK. A-3 OCCUPANCY
- M/A — TYPE V-N, FULLY SPRINK. M/A-3 OCCUPANCY
- TRANSMISSION TOWER
- # — MAIN ENTRY DRIVES AND DRIVEWAY NUMBER
- LIGHT POLE (POLE #RTS35) TYP. 38' HEIGHT. IN PG&E EASEMENT 15' HEIGHT.
- LIGHT POLE (HAPCO POLE) TYP. 38' HEIGHT. IN PG&E EASEMENT 15' HEIGHT.
- CURRENT ZONING / CURRENT USE
- 6'x6' TREE WELL
- CART CORRALS
- PEDESTRIAN PATH OF TRAVEL
- PROPERTY LINE
- PUBLIC ACCESS EASEMENT
- # — NUMBER OF PARKING STALLS PER ROW
- # — NUMBER OF PARKING STALLS PER PARCEL
- FIRE HYDRANT
- G.C. — GARDEN CENTER

60' 30' 15' 0'

AUGUST 22, 2008

0813.1084.01

COPYRIGHT© 2007

FRESNO SHORES, LLC

QUADRANT 5

MARKETPLACE AT EL PASEO

HERNDON AVENUE AND BRYAN AVENUE
FRESNO, CALIFORNIA

Market at El Paseo

525 E. COLORADO BOULEVARD
4TH FLOOR
PASADENA, CA 91101

T 626.796.8230
F 626.796.8735

A1.17

KKS architects™

NOTE: THIS INFORMATION IS CONCEPTUAL IN NATURE AND IS SUBJECT TO ADJUSTMENTS PENDING FURTHER VERIFICATION AND CLIENT, TENANT, AND GOVERNMENTAL AGENCY APPROVALS. NO WARRANTIES OR GUARANTIES OF ANY KIND ARE GIVEN OR IMPLIED BY THE ARCHITECT.

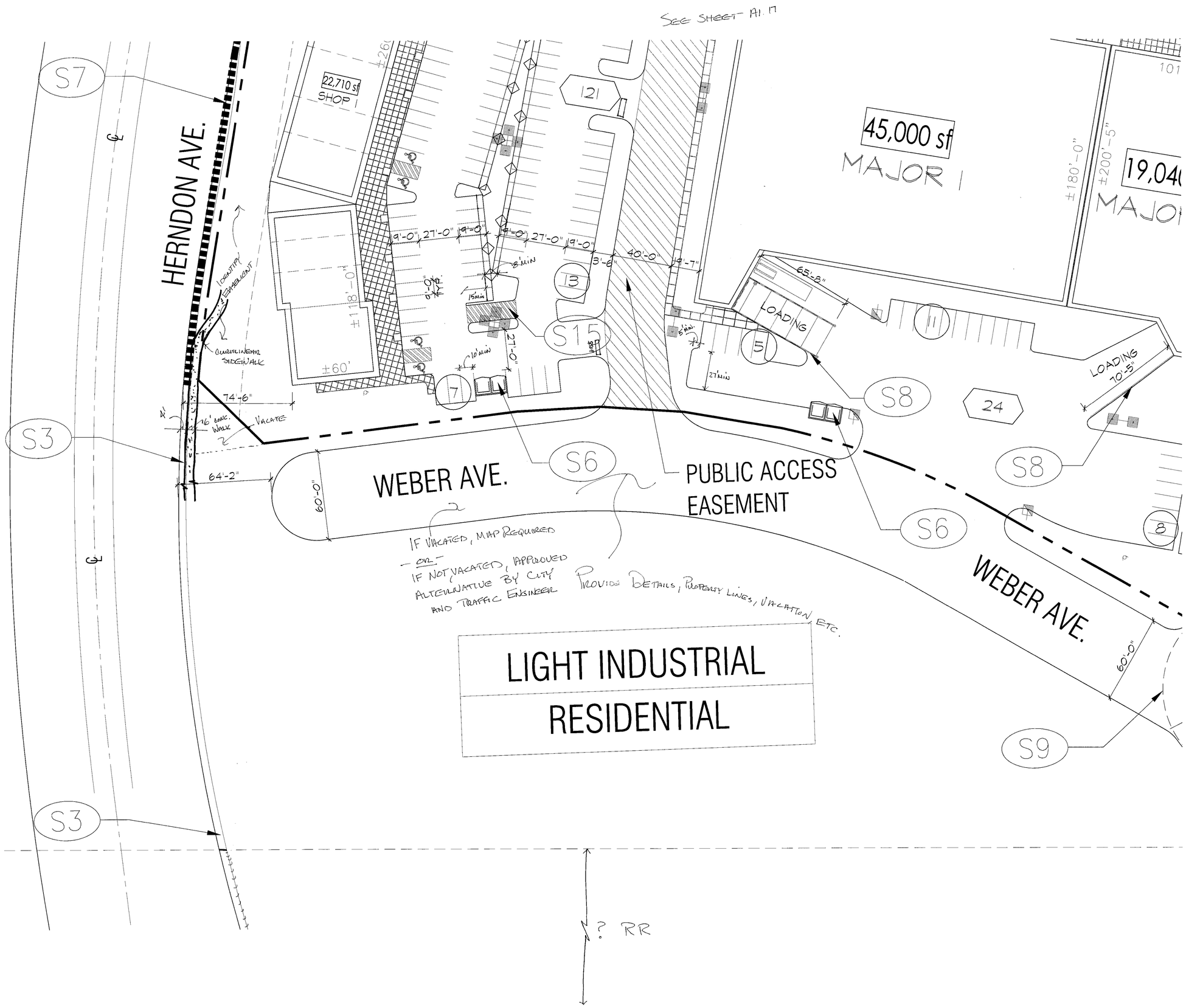

SITE PLAN KEY NOTES

- S1 TRAFFIC SIGNAL
- S2 MONUMENT SIGN, TYPICAL
- S3 SIDEWALK PER STREET SECTION ADJACENT TO HERNDON
- S4 10' MEANDERING SIDEWALK ADJACENT TO BRYAN
- S5 PARK & RIDE
- S6 TYPICAL TRASH ENCLOSURE
- S7 PEDESTRIAN PATH, CONSTRUCT TO RR PROPERTY LINE.
- S8 6' SCREEN WALL, TYP.
- S9 TRUCK TURNING PATH
- S10 ACCENT PAVING
- S11 6' HIGH PIPE FENCE
- S12 20' SEWER EASEMENT
- S13 PG&E EASEMENT
- S14 OUTDOOR PATIO
- S15 LOADING ZONE
- S16 TRANSIT STOP BUS ENCLOSURE 5'x12'
- S17 DRIVE THRU WINDOW

SITE PLAN LEGEND

SEE SHEET A1.22

- (M) TYPE V-N, FULLY SPRINK. M OCCUPANCY
- (A) TYPE V-N, FULLY SPRINK. A-3 OCCUPANCY
- (M/A) TYPE V-N, FULLY SPRINK. M/A-3 OCCUPANCY
- TRANSMISSION TOWER
- (#) MAIN ENTRY DRIVES AND DRIVEWAY NUMBER
- LIGHT POLE (POLE #RTS35) TYP. 38' HEIGHT. IN PG&E EASEMENT 15' HEIGHT.
- LIGHT POLE (HAPCO POLE) TYP. 38' HEIGHT. IN PG&E EASEMENT 15' HEIGHT.
- CURRENT ZONING / CURRENT USE
- 6'x6' TREE WELL
- CART CORRALS
- PEDESTRIAN PATH OF TRAVEL
- PROPERTY LINE
- PUBLIC ACCESS EASEMENT
- (#) NUMBER OF PARKING STALLS PER ROW
- (#) NUMBER OF PARKING STALLS PER PARCEL
- FIRE HYDRANT
- G.C. GARDEN CENTER

60' 30' 15' 0'

AUGUST 22, 2008

0813.1084.01

COPYRIGHT©2007

QUADRANT 9

FRESNO SHORES, LLC

MARKETPLACE AT EL PASEO

HERNDON AVENUE AND BRYAN AVENUE
FRESNO, CALIFORNIA

Market Place

525 E. COLORADO BOULEVARD
4TH FLOOR
PASADENA, CA 91101

T 626.796.8230
F 626.796.8735

KK architects™

A1.21

NOTE: THIS INFORMATION IS CONCEPTUAL IN NATURE AND IS SUBJECT TO ADJUSTMENTS PENDING FURTHER VERIFICATION AND CLIENT, TENANT, AND GOVERNMENTAL AGENCY APPROVALS. NO WARRANTIES OR GUARANTIES OF ANY KIND ARE GIVEN OR IMPLIED BY THE ARCHITECT.

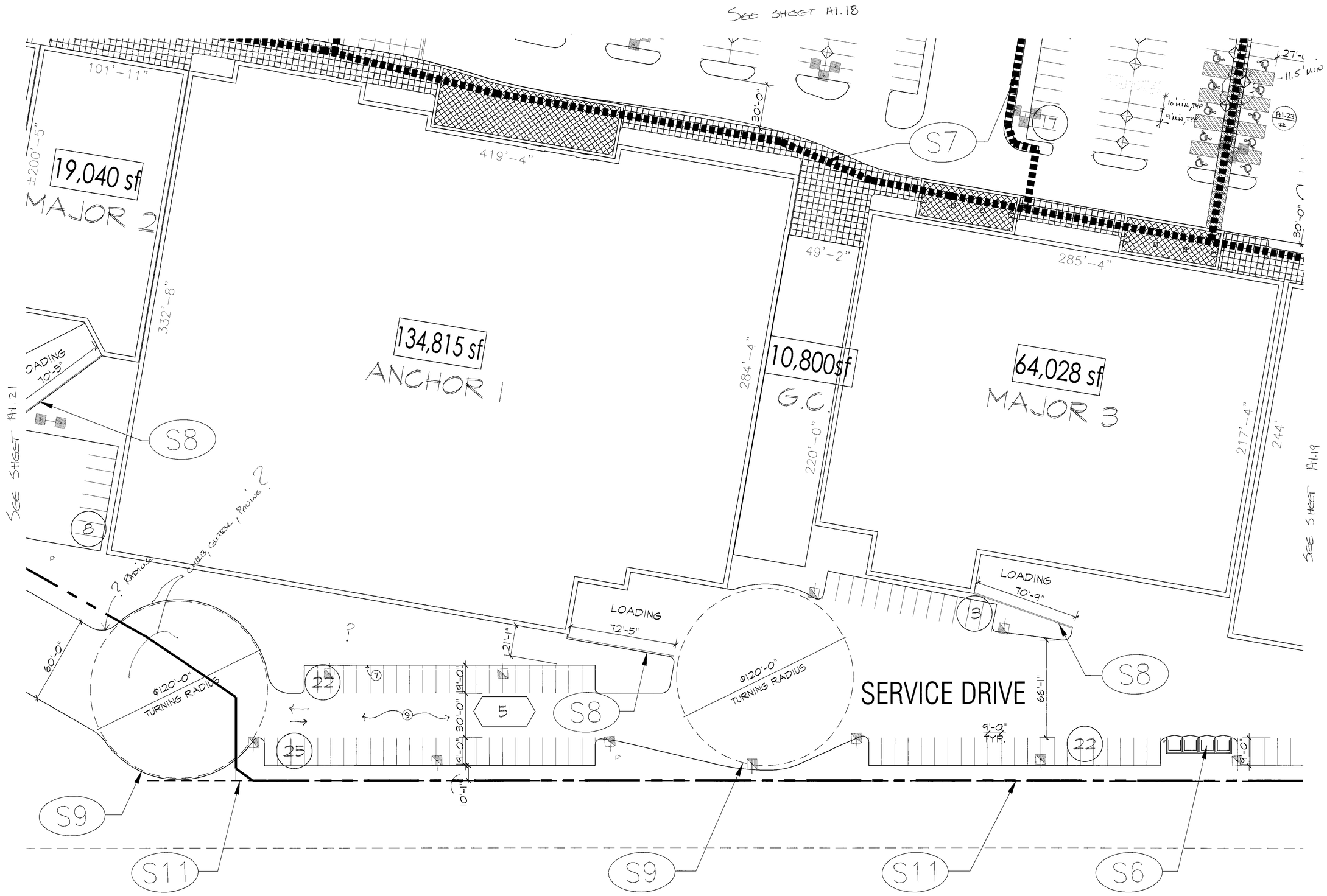

SITE PLAN KEY NOTES

- S1 TRAFFIC SIGNAL
- S2 MONUMENT SIGN, TYPICAL
- S3 SIDEWALK PER STREET SECTION ADJACENT TO HERNDON
- S4 10' MEANDERING SIDEWALK ADJACENT TO BRYAN
- S5 PARK & RIDE
- S6 TYPICAL TRASH ENCLOSURE
- S7 PEDESTRIAN PATH
- S8 6' SCREEN WALL, TYP.
- S9 TRUCK TURNING PATH
- S10 ACCENT PAVING
- S11 6' HIGH PIPE FENCE
- S12 20' SEWER EASEMENT
- S13 PG&E EASEMENT
- S14 OUTDOOR PATIO
- S15 LOADING ZONE
- S16 TRANSIT STOP BUS ENCLOSURE 5'x12'
- S17 DRIVE THRU WINDOW

SITE PLAN LEGEND

- M — TYPE V-N, FULLY SPRINK. M OCCUPANCY
- A — TYPE V-N, FULLY SPRINK. A-3 OCCUPANCY
- M/A — TYPE V-N, FULLY SPRINK. M/A-3 OCCUPANCY
- TRANSMISSION TOWER
- # — MAIN ENTRY DRIVES AND DRIVEWAY NUMBER
- LIGHT POLE (POLE #RTS35) TYP. 38' HEIGHT. IN PG&E EASEMENT 15' HEIGHT.
- LIGHT POLE (HAPCO POLE) TYP. 38' HEIGHT. IN PG&E EASEMENT 15' HEIGHT.
- CURRENT ZONING / CURRENT USE
- 6'x6' TREE WELL
- CART CORRALS
- PEDESTRIAN PATH OF TRAVEL
- PROPERTY LINE
- PUBLIC ACCESS EASEMENT
- # — NUMBER OF PARKING STALLS PER ROW
- # — NUMBER OF PARKING STALLS PER PARCEL
- FIRE HYDRANT
- G.C. — GARDEN CENTER

60' 30' 15' 0'

AUGUST 22, 2008

0813.1084.01

QUADRANT 10

COPYRIGHT © 2007

FRESNO SHORES, LLC

MARKETPLACE AT EL PASEO

HERNDON AVENUE AND BRYAN AVENUE
FRESNO, CALIFORNIA

Market at El Paseo

525 E. COLORADO BOULEVARD
4TH FLOOR
PASADENA, CA 91101

T 626.796.8230
F 626.796.8735

A1.22

KK architects™

NOTE: THIS INFORMATION IS CONCEPTUAL IN NATURE AND IS SUBJECT TO ADJUSTMENTS PENDING FURTHER VERIFICATION AND CLIENT, TENANT, AND GOVERNMENTAL AGENCY APPROVALS. NO WARRANTIES OR GUARANTIES OF ANY KIND ARE GIVEN OR IMPLIED BY THE ARCHITECT.

A-8

VI IV XI

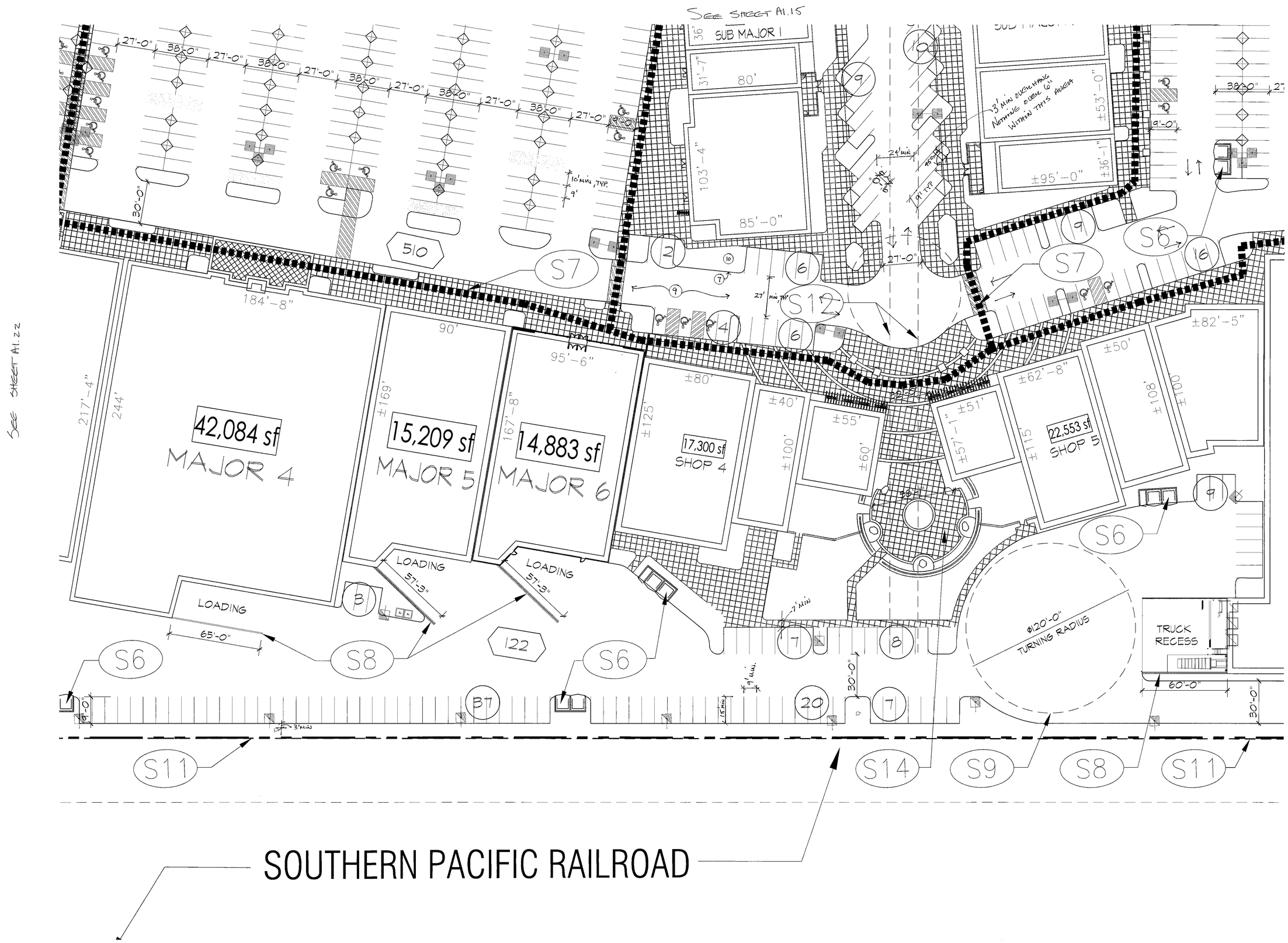

SITE PLAN KEY NOTES

- S1 TRAFFIC SIGNAL
- S2 MONUMENT SIGN, TYPICAL
- S3 SIDEWALK PER STREET SECTION ADJACENT TO HERNDON
- S4 10' MEANDERING SIDEWALK ADJACENT TO BRYAN
- S5 PARK & RIDE
- S6 TYPICAL TRASH ENCLOSURE
- S7 PEDESTRIAN PATH
- S8 6' SCREEN WALL, TYP.
- S9 TRUCK TURNING PATH
- S10 ACCENT PAVING
- S11 6' HIGH PIPE FENCE
- S12 20' SEWER EASEMENT
- S13 PG&E EASEMENT
- S14 OUTDOOR PATIO
- S15 LOADING ZONE
- S16 TRANSIT STOP BUS ENCLOSURE 5'x12'
- S17 DRIVE THRU WINDOW

SITE PLAN LEGEND

- M — TYPE V-N, FULLY SPRINK. M OCCUPANCY
- A — TYPE V-N, FULLY SPRINK. A-3 OCCUPANCY
- M/A — TYPE V-N, FULLY SPRINK. M/A-3 OCCUPANCY
- TRANSMISSION TOWER
- # — MAIN ENTRY DRIVES AND DRIVEWAY NUMBER
- LIGHT POLE (POLE #RTS35) TYP. 38' HEIGHT. IN PG&E EASEMENT 15' HEIGHT.
- LIGHT POLE (HAPCO POLE) TYP. 38' HEIGHT. IN PG&E EASEMENT 15' HEIGHT.
- CURRENT ZONING / CURRENT USE
- 6'x6' TREE WELL
- CART CORRALS
- PEDESTRIAN PATH OF TRAVEL
- PROPERTY LINE
- PUBLIC ACCESS EASEMENT
- # — NUMBER OF PARKING STALLS PER ROW
- # — NUMBER OF PARKING STALLS PER PARCEL
- FIRE HYDRANT
- G.C. — GARDEN CENTER

60' 30' 15' 0'

AUGUST 22, 2008 — 0813.1084.01

QUADRANT 7

COPYRIGHT © 2007

FRESNO SHORES, LLC

MARKETPLACE AT EL PASEO

HERNDON AVENUE AND BRYAN AVENUE
FRESNO, CALIFORNIA

Market at El Paseo

525 E. COLORADO BOULEVARD
4TH FLOOR
PASADENA, CA 91101

T 626.796.8230
F 626.796.8735

A1.19

KK architects™

NOTE: THIS INFORMATION IS CONCEPTUAL IN NATURE AND IS SUBJECT TO ADJUSTMENTS PENDING FURTHER VERIFICATION AND CLIENT, TENANT, AND GOVERNMENTAL AGENCY APPROVALS. NO WARRANTIES OR GUARANTIES OF ANY KIND ARE GIVEN OR IMPLIED BY THE ARCHITECT.

A-9

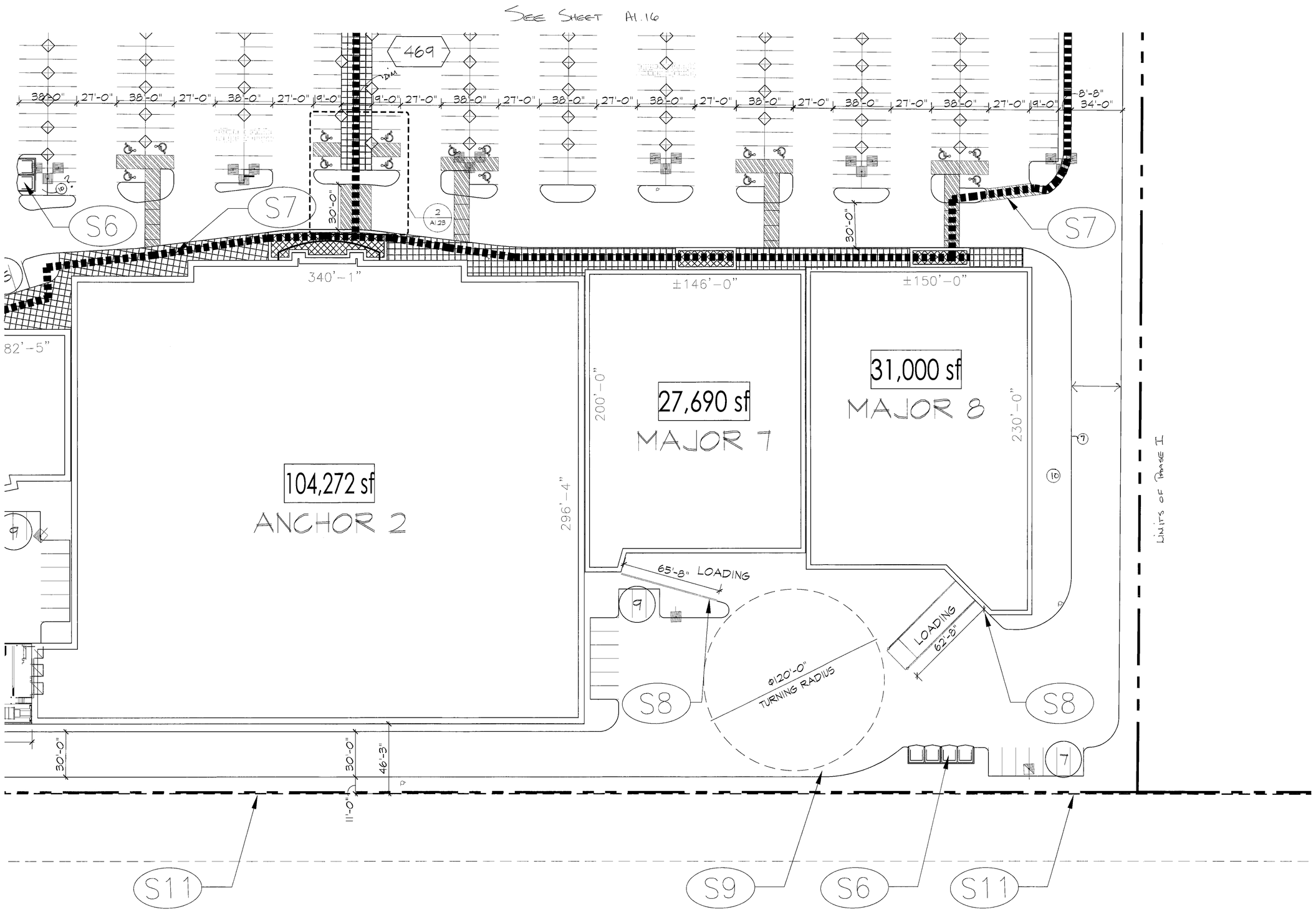

SITE PLAN KEY NOTES

- S1 TRAFFIC SIGNAL
- S2 MONUMENT SIGN, TYPICAL
- S3 SIDEWALK PER STREET SECTION ADJACENT TO HERNDON
- S4 10' MEANDERING SIDEWALK ADJACENT TO BRYAN
- S5 PARK & RIDE
- S6 TYPICAL TRASH ENCLOSURE
- S7 PEDESTRIAN PATH
- S8 6' SCREEN WALL, TYP.
- S9 TRUCK TURNING PATH
- S10 ACCENT PAVING
- S11 6' HIGH PIPE FENCE
- S12 20' SEWER EASEMENT
- S13 PG&E EASEMENT
- S14 OUTDOOR PATIO
- S15 LOADING ZONE
- S16 TRANSIT STOP BUS ENCLOSURE 5'x12'
- S17 DRIVE THRU WINDOW

SITE PLAN LEGEND

- M — TYPE V-N, FULLY SPRINK. M OCCUPANCY
- A — TYPE V-N, FULLY SPRINK. A-3 OCCUPANCY
- M/A — TYPE V-N, FULLY SPRINK. M/A-3 OCCUPANCY
- TRANSMISSION TOWER
- # — MAIN ENTRY DRIVES AND DRIVEWAY NUMBER
- LIGHT POLE (POLE #RTS35) TYP. 38' HEIGHT. IN PG&E EASEMENT 15' HEIGHT.
- LIGHT POLE (HAPCO POLE) TYP. 38' HEIGHT. IN PG&E EASEMENT 15' HEIGHT.
- CURRENT ZONING / CURRENT USE
- 5'x5' TREE WELL
- CART CORRALS
- PEDESTRIAN PATH OF TRAVEL
- PROPERTY LINE
- PUBLIC ACCESS EASEMENT
- # — NUMBER OF PARKING STALLS PER ROW
- # — NUMBER OF PARKING STALLS PER PARCEL
- FIRE HYDRANT
- G.C. — GARDEN CENTER

60' 30' 15' 0'

AUGUST 22, 2008

0813.1084.01

COPYRIGHT © 2007

QUADRANT 8

FRESNO SHORES, LLC

MARKETPLACE AT EL PASEO

HERNDON AVENUE AND BRYAN AVENUE
FRESNO, CALIFORNIA

Market Place

525 E. COLORADO BOULEVARD
4TH FLOOR
PASADENA, CA 91101

T 626.796.8230
F 626.796.8735

A1.20

KKS architects™

NOTE: THIS INFORMATION IS CONCEPTUAL IN NATURE AND IS SUBJECT TO ADJUSTMENTS PENDING FURTHER VERIFICATION AND CLIENT, TENANT, AND GOVERNMENTAL AGENCY APPROVALS. NO WARRANTIES OR GUARANTIES OF ANY KIND ARE GIVEN OR IMPLIED BY THE ARCHITECT.

01-10

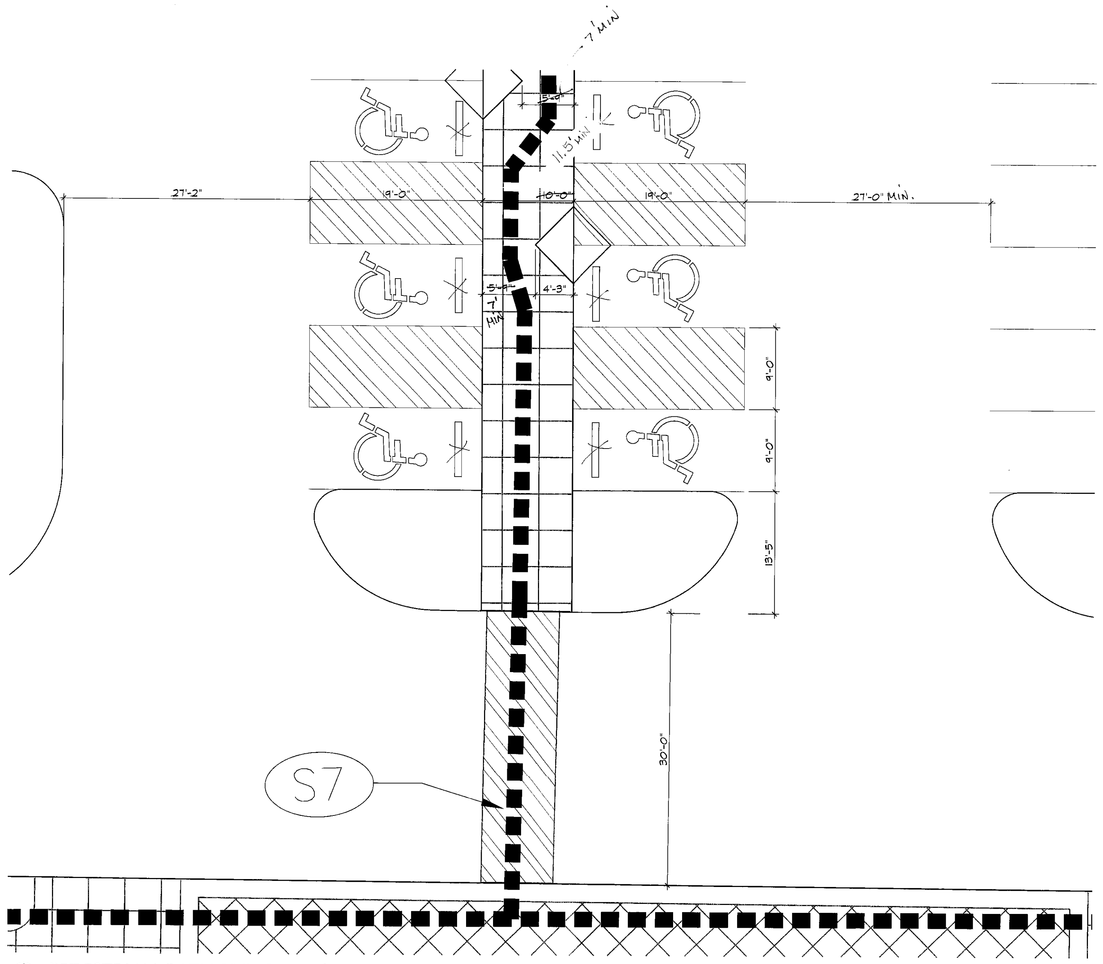

1 PEDESTRIAN PATH TYPICAL 10'-0 WIDE
SCALE: 1/8"=1'-0"

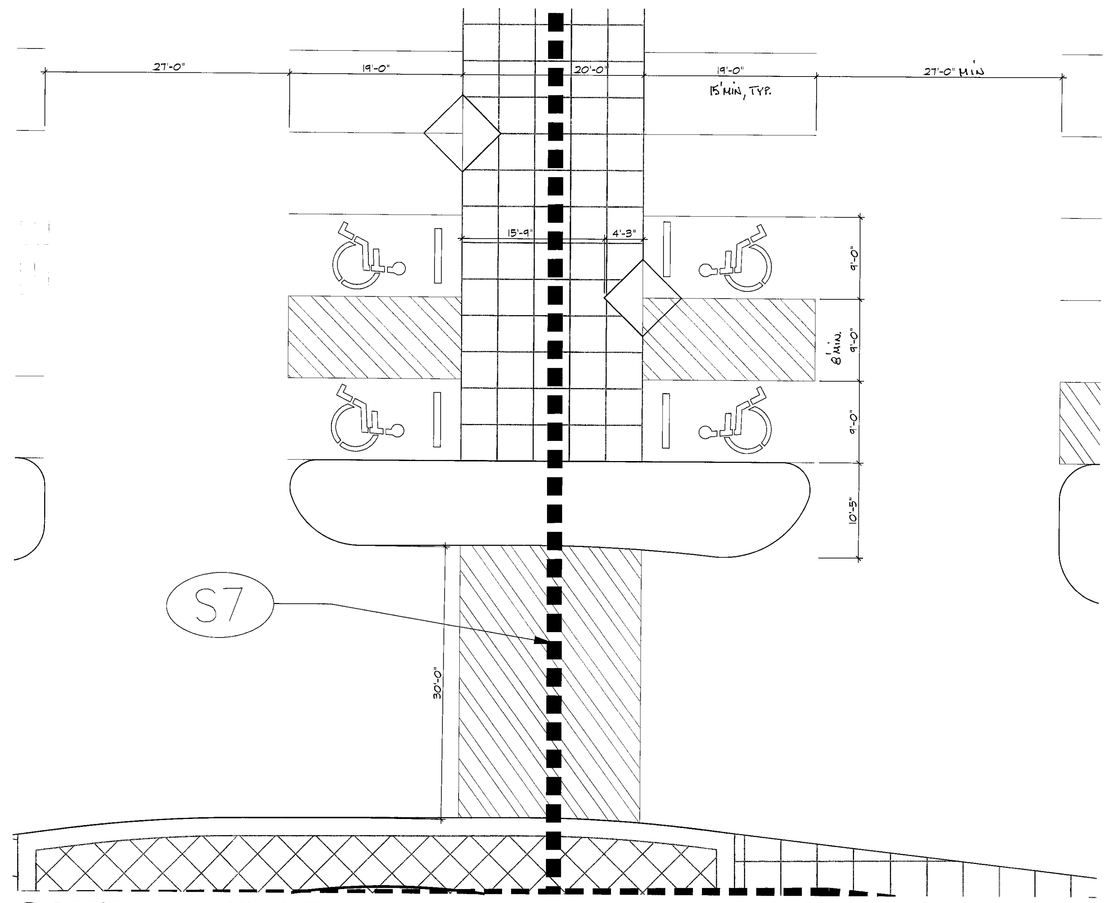

2 PEDESTRIAN PATH 20'-0" WIDE
SCALE: 1/8"=1'-0"

SITE PLAN KEY NOTES

- S1 TRAFFIC SIGNAL
- S2 MONUMENT SIGN, TYPICAL
- S3 SIDEWALK PER STREET SECTION ADJACENT TO HERNDON
- S4 6' 10' MEANDERING SIDEWALK ADJACENT TO BRYAN
- S5 PARK & RIDE
- S6 TYPICAL TRASH ENCLOSURE
- S7 PEDESTRIAN PATH
- S8 6' SCREEN WALL, TYP.
- S9 TRUCK TURNING PATH
- S10 ACCENT PAVING
- S11 6' HIGH PIPE FENCE
- S12 20' SEWER EASEMENT
- S13 PG&E EASEMENT
- S14 OUTDOOR PATIO
- S15 LOADING ZONE
- S16 TRANSIT STOP BUS ENCLOSURE 5'x12'
- S17 DRIVE THRU WINDOW

SITE PLAN LEGEND

- M — TYPE V-N, FULLY SPRINK. M OCCUPANCY
- A — TYPE V-N, FULLY SPRINK. A-3 OCCUPANCY
- M/A — TYPE V-N, FULLY SPRINK. M/A-3 OCCUPANCY
- TRANSMISSION TOWER
- # — MAIN ENTRY DRIVES AND DRIVEWAY NUMBER
- LIGHT POLE (POLE #RTS35) TYP. 38' HEIGHT. IN PG&E EASEMENT 15' HEIGHT.
- LIGHT POLE (HAPCO POLE) TYP. 38' HEIGHT. IN PG&E EASEMENT 15' HEIGHT.
- CURRENT ZONING / CURRENT USE
- 6'x6' TREE WELL
- CART CORRALS
- PEDESTRIAN PATH OF TRAVEL
- PROPERTY LINE
- PUBLIC ACCESS EASEMENT
- # — NUMBER OF PARKING STALLS PER ROW
- # — NUMBER OF PARKING STALLS PER PARCEL
- FIRE HYDRANT
- G.C. — GARDEN CENTER

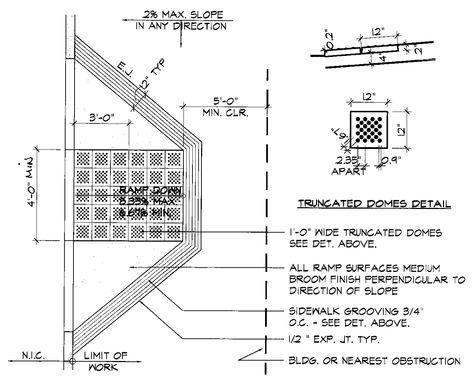

3 CURB RAMP TYPICAL
SCALE: 1/4"=1'-0"

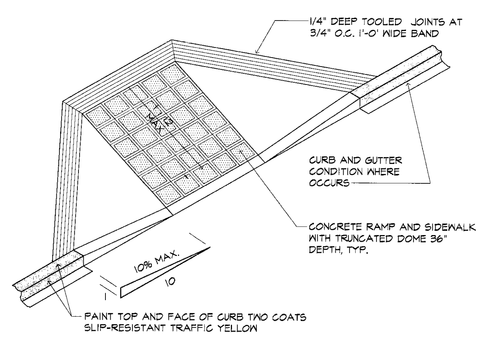

4 ISOMETRIC VIEW OF CURB CUT RAMP
SCALE: 3/4"=1'-0"

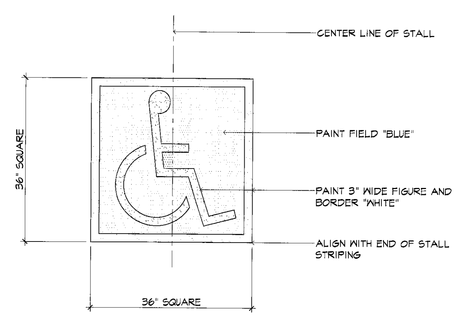

5 PAINTED ACCESSIBLE PARKING SYMBOL
SCALE: 3/4"=1'-0"

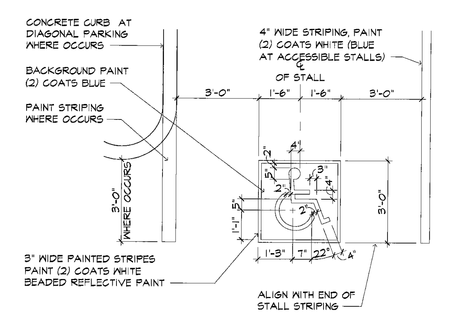

NOTE: PROVIDE SIMILAR PLACEMENT AT DIAGONAL PARKING.

6 PAINTED ACCESSIBLE PARKING SYMBOL
SCALE: 3/8"=1'-0"

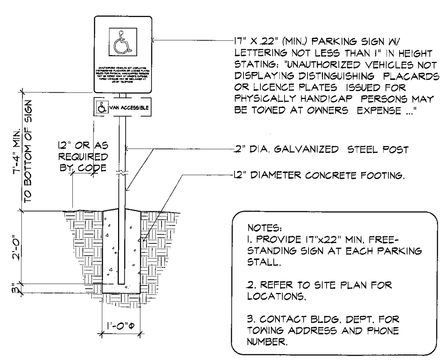

7 ACCESSIBLE SITE SIGNAGE
SCALE: 1/2"=1'-0"

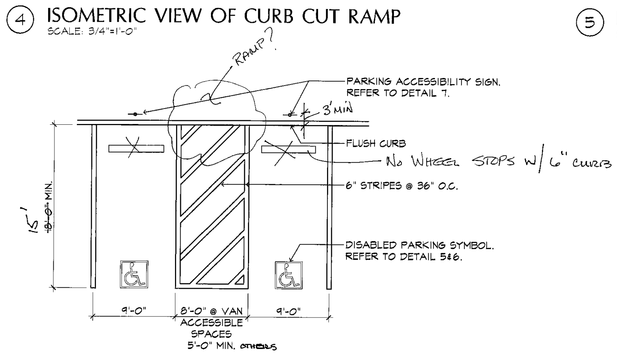

NOTE: SURFACE SLOPE OF STALL SHALL NOT EXCEED 2% IN ANY DIRECTION.

8 ACCESSIBLE PARKING STALL
SCALE: 1/8"=1'-0"

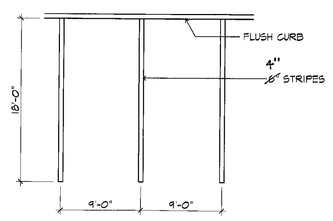

9 PARKING STALL TYPICAL
SCALE: 1/8"=1'-0"

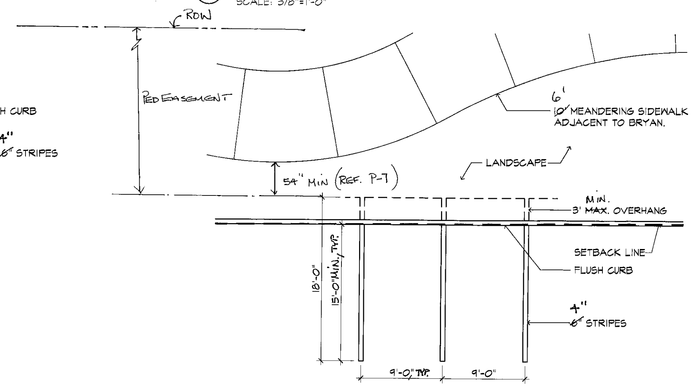

10 PARKING STALL WITH OVERHANG
SCALE: 1/8"=1'-0"

AS SHOWN
AUGUST 22, 2008
0813.1084.01

ACCESSIBLE PARKING AND DETAILS

COPYRIGHT © 2007

FRESNO SHORES, LLC

MARKETPLACE AT EL PASEO

HERNDON AVENUE AND BRYAN AVENUE
FRESNO, CALIFORNIA

Market Place

525 E. COLORADO BOULEVARD
4TH FLOOR
PASADENA, CA 91101
T 626.796.8230
F 626.796.8735

A1.23

KK architects™

NOTE: THIS INFORMATION IS CONCEPTUAL IN NATURE AND IS SUBJECT TO ADJUSTMENTS PENDING FURTHER VERIFICATION AND CLIENT, TENANT, AND GOVERNMENTAL AGENCY APPROVALS. NO WARRANTIES OR GUARANTIES OF ANY KIND ARE GIVEN OR IMPLIED BY THE ARCHITECT.

A-11